HIP

Hip&go

[Hip'n go]

FIRST INTENTION CEMENTED STRAIGHT STEM: 130°

Hip'n go® Range Documentation

FH ORTHOPEDICS
quality for health

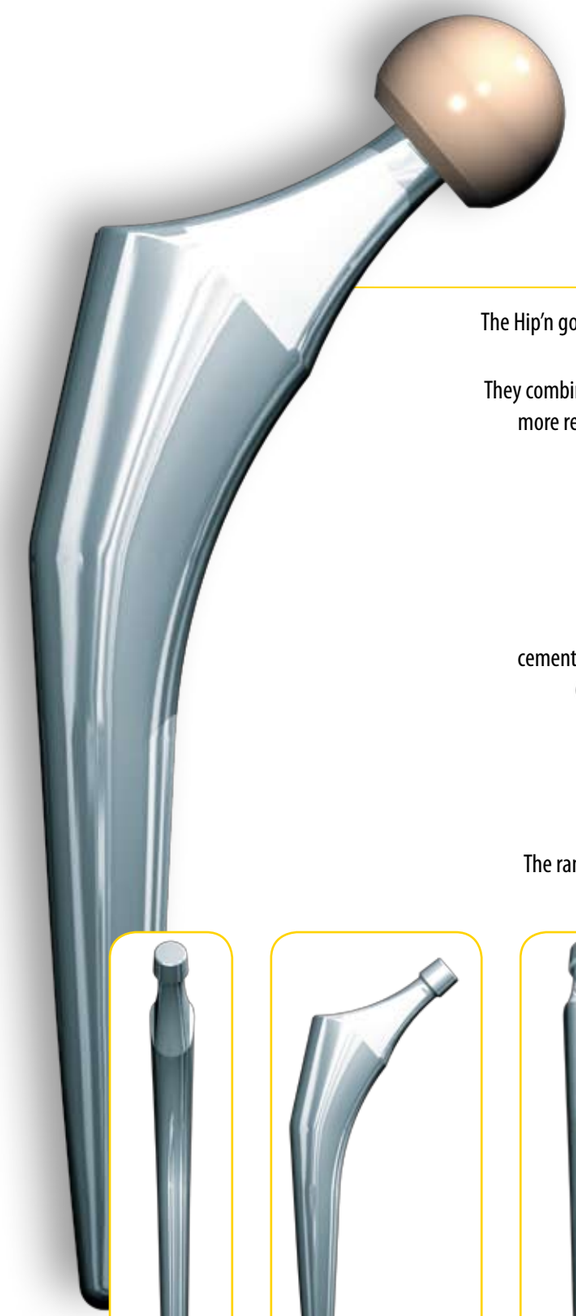

FEMORAL STEM

The Hip'n go cemented straight stems are self-locking stems based on a conventional design.

They combine the traditional characteristics of a cemented stem with more recent standards for the neck, material, surface texture and surgical instrumentation.

CONCEPT

The universal Hip'n go concept offers the choice, pre- or post-operatively, whether to use a standard cemented or cementless stem (CCD angle 130°) or a lateralised cementless stem (CCD angle 122°).The tulip shape of the metaphysis allows an optimal anteroposterior filling.

RANGE AND MATERIALS

The range of straight cemented Hip'n go stems includes 10 sizes, available in 130°.

The Hip'n go cemented stem is made of M30NW stainless steel, with a mirror-polished surface, to meet the highest quality standards for a cemented implant.

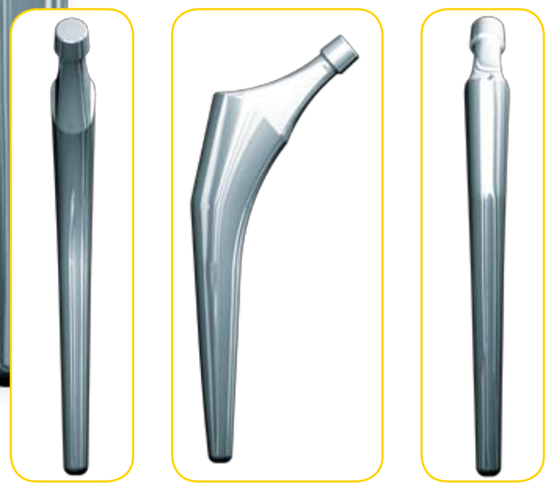

Cemented stem 130°

TAPER AND NECK

The neck is fitted with a 12/14 taper, enabling it to be used with an alumina, stainless steel or chrome-cobalt head. The taper is tapered, with a flat anteroposterior section, to increase mobility. A progressive geometry has been applied to the neck, to increase mechanical resistance.

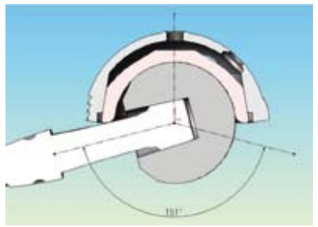

Head Ø36mm; ROM 151°

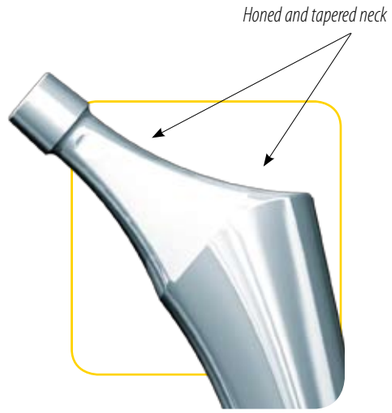

METAPHYSIS

The proximal part of the metaphysis includes a semi-circular cavity, for guided impaction and a screw thread to facilitate extraction of the stem, if necessary.

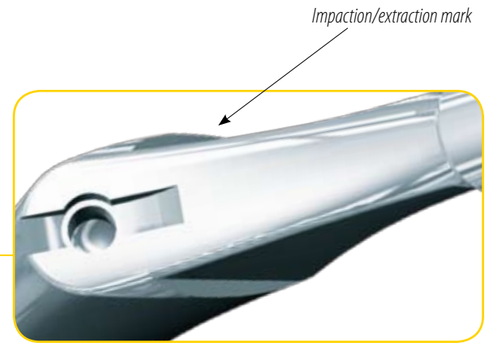

INSTRUMENTATION

The specific Hip'n go instrumentation is a common instrumentation for all the cemented and cementless stems available in this program. This instrumentation allows all traditional approaches to be used, including mini-invasive approaches.

Rasp handles are available for both posterior and anterior approaches.

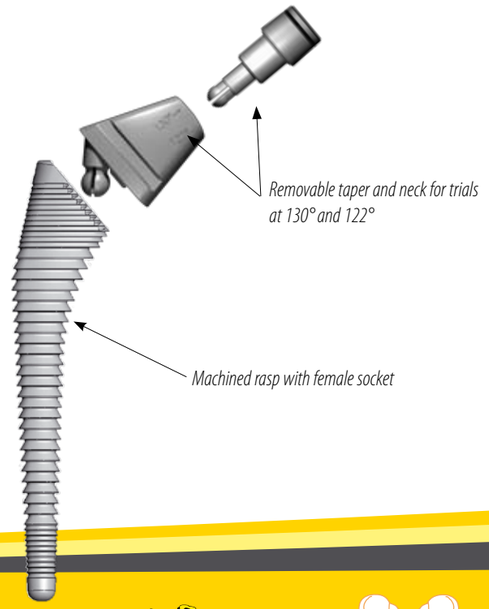

References

[First intention cemented straight stem: 130°]

STANDARD STEMS	
256 577	HNG stem 130° AC S1
256 578	HNG stem 130° AC S2
256 579	HNG stem 130° AC S3
256 580	HNG stem 130° AC S4
256 581	HNG stem 130° AC S5
256 582	HNG stem 130° AC S6
256 583	HNG stem 130° AC S7
256 584	HNG stem 130° AC S8
256 585	HNG stem 130° AC S9
256 586	HNG stem 130° AC S10

BIOLOX FORTE CERAMIC HEADS	
234 131	Taper 12/14 Ø28 (-3,5)
234 132	Taper 12/14 Ø28 (0)
234 133	Taper 12/14 Ø28 (+3,5)
250 729	Taper 12/14 Ø32 (-3,5)
250 730	Taper 12/14 Ø32 (0)
250 731	Taper 12/14 Ø32 (+3,5)
254 525	Taper 12/14 Ø36 (-3,5)
254 526	Taper 12/14 Ø36 (0)
254 527	Taper 12/14 Ø36 (+3,5)

STAINLESS STEEL HEADS	
231 402	Taper 12/14 Ø22,2 (0)
231 403	Taper 12/14 Ø22,2 (+2)
231 391	Taper 12/14 Ø28 (-3,5)
231 392	Taper 12/14 Ø28 (0)
231 393	Taper 12/14 Ø28 (+3,5)
231 394	Taper 12/14 Ø28 (+7)
231 395	Taper 12/14 Ø28 (+10)

Other implants of the range

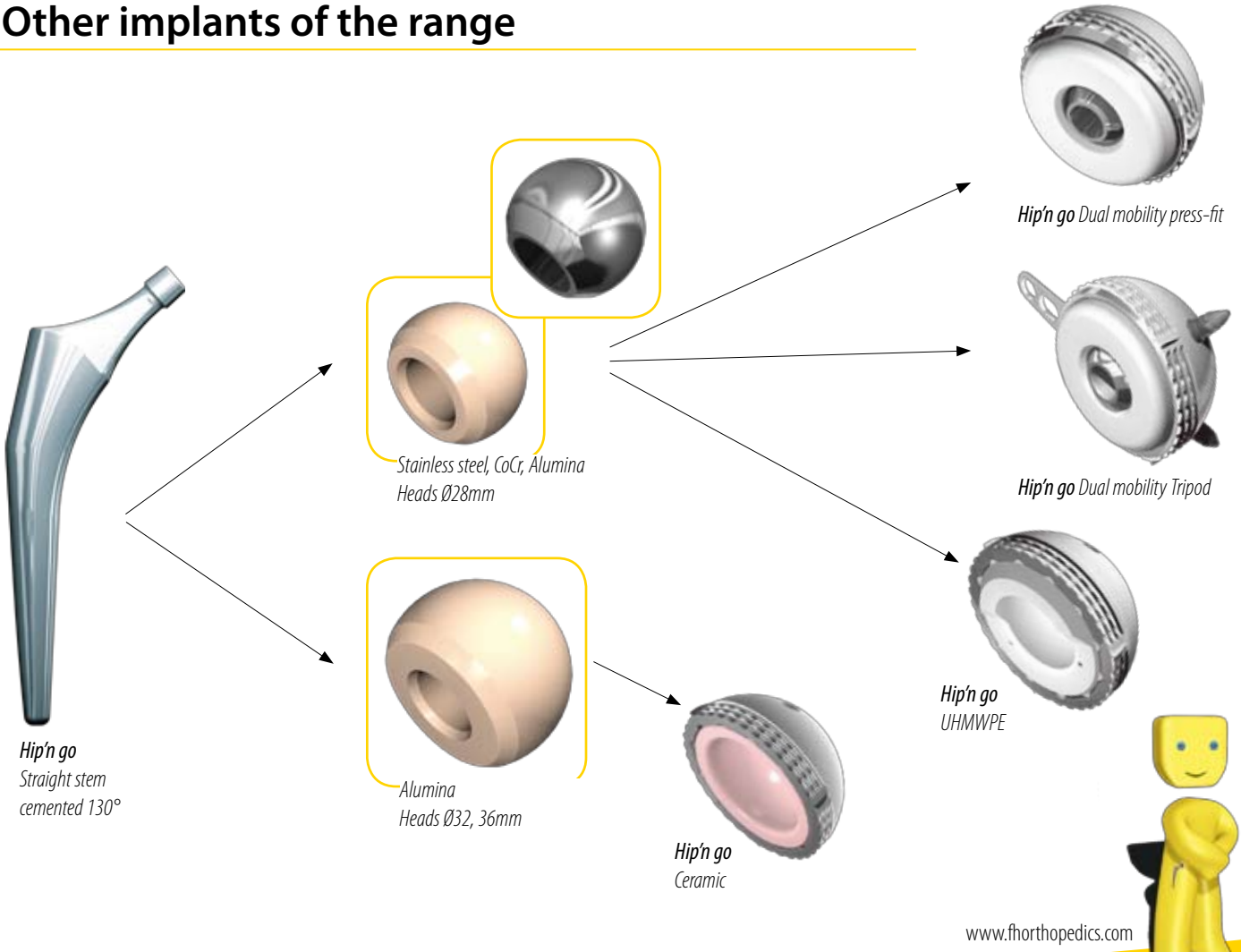

www.fhorthopedics.com

© - 201004 - © FH ORTHOPEDICS Communication - hdstsc130_hip10_ev1

FH ORTHOPEDICS
quality for health

FH ORTHOPEDICS S.A.S
3 rue de la Forêt - F 68990 HEIMSBRUNN
Tél. +33 3 89 81 90 92 / Fax : +33 3 89 81 80 11
e-mail : orthopedie@fhorthopedics.fr
www.fhorthopedics.com

POLSKA, IMPLANTS INDUSTRIE
Ul. Garbary 95/A6,
61-757 Poznan
Tel : +48 61 863 81 27 / Fax : +48 61 863 81 28
Email : fh.orthopedics@poczta.internetdsl.pl

USA, FH ORTHOPEDICS INC.
4118 N. Nashville Ave.
Chicago - IL 60634
Tel.: +1 (773) 290 1039 / Fax : +1 (773) 539 9328
e-mail : g.sherburn@fhorthopedics.com

GROUPE FH FOURNITURES HOSPITALIERES